UNCLASSIFIED

AD 403 870

*Reproduced*
*by the*

DEFENSE DOCUMENTATION CENTER

FOR

SCIENTIFIC AND TECHNICAL INFORMATION

CAMERON STATION, ALEXANDRIA, VIRGINIA

UNCLASSIFIED

NOTICE: When government or other drawings, specifications or other data are used for any purpose other than in connection with a definitely related government procurement operation, the U. S. Government thereby incurs no responsibility, nor any obligation whatsoever; and the fact that the Government may have formulated, furnished, or in any way supplied the said drawings, specifications, or other data is not to be regarded by implication or otherwise as in any manner licensing the holder or any other person or corporation, or conveying any rights or permission to manufacture, use or sell any patented invention that may in any way be related thereto.

63-3-4

4 NA
5 196 8

CENTRE DE PHYSIQUE ÉLECTRONIQUE ET CORPUSCULAIRE

DOMAINE DE CORBEVILLE par ORSAY (Seine-et-Oise)

CATALOGED BY ASTIA
AS AD NO. 403870

CONTRACT CSF/SIGNAL CORPS

-:-:-

15

European research office DA 91 591 EUC 2025 -

16 NA
17-19 NA
20 U
21 NA

-:-:-

403 870

6

RESEARCH ON NOISE IN CROSSED FIELD DEVICES

7 NA
5 11

DDC
RECEIVED
MAY 16 1963
TISIA B

-:-:-

First quaterly Report

9 Quarterly Rept. no 1.

-:-:-

10 NA

14 W.R. 971

11 Jan 63

January 1963

12 27p.

13 NA

CSF COMPAGNIE GÉNÉRALE DE TÉLÉGRAPHIE SANS FIL

~~NO OTS~~

$4.60

Domaine de Corbeville — BP N° 10 — ORSAY (Seine-et-Oise) Tél. 928-47-20
France

# CONTENTS

INTRODUCTION . . . . . 1

I - INFLUENCE OF THE FAST MODE ON THE GAIN OF A TPOM . . . . . 4

II - REDUCTION OF THE FAST MODE . . . . . 13

III - DESIGN OF A TPOM FOR L BAND . . . . . 15

IV - EXPERIMENTAL RESULTS . . . . . 19

PROGRAMME FOR THE NEXT PERIOD

APPENDIX A

LIST OF FIGURES.

# - I N T R O D U C T I O N -

In this report it is proposed to develop a TPOM tube working under CW conditions, seeking more particularly to reduce causes of instabilities and rf noise.

1) - Instabilities

Instability is generally due to coupling between the input and output of the tube, this causing rapid variations of gain and spurious oscillations. This coupling is introduced in the following way :

a) The tube is badly matched at both the input and the output, and attenuation is insufficient in relation to the gain of the tube. Reflection can occur also at the attenuation and at irregularities in the line.

b) A fast mode may propagate between the line and the sole-plate. This mode is excited at the two ends of the line at the input transformer and by line irregularities. The problem of decoupling between input and output is more difficult than in the preceding case, since the fast mode suffers very little attenuation. Further, coupling between input and output can occur at the resonance frequencies of the body of the tube.

2) Noise -

When oscillations are suppressed in an M optical system, it is found that beam noise is of a white noise kind, generally much more intense than thermal noise, by a factor which may reach $10^3$ to $10^4$. The origin of this abnormal noise is not at all well understood and many hypothese have been put forth in this respect.(1) The noise characteristics of a pulsed TPOM are known(2), but the TPOM probably behaves differently on CW on account of its much higher beam impedance (10 to 50 kohms against 0.5 to 1 kohm). On this point it may be noted that :

1) Abnormal noise in a TPOM operated on CW is essentially related to the electron gun.

2) For a high beam impedance it is possible to reduce or to suppress abnormal gun noise by choosing a narrow cathode compared to the distance between the cathode and the anode. For greater detail see(3).

---

(1) T.Van Duzer and J.R. Whinnery : "Noise in Crossed-field Electron Beams" - Crossed Field Microwave Devices, Vol 1 - Academic Press.

(2) O.Doehler : "TPOM Magnetron Amplifier" - Crossed-field Microwave Devices - Vol 2 p.155 - Academic Press.

(3) Research on Noise in Crossed-field Devices" - Final Report - Sept 1961 - Contract CSF/Signal Corps - DA 91.591 FUC 1807 ol 7717 61.

Further, Anderson[4] has obtained signal /to noise ratios comparable to those of a normal "O" tube using a space charge gun in a carcinotron. On the basis of this result Van Duzer [1] suggests that perhaps the time has come to try and produce low-noise TPOM's. It seems improbable that such tubes - if they ever come about - can compete with low-noise "O" tubes. In any case it is first necessary to solve the more "trivial" problem of suppression of instabilities. The present work deals essentially with this difficulty.

-:-:-:-:-

(4) J.R. Anderson : Noise Measurements on an M type backward wave Amplifier; PIRE, 48, 946 (1960).

## I - INFLUENCE OF THE FAST MODE ON THE GAIN OF A TPOM

It is assumed that the line is perfectly regular from the geometrical point of view so that the fast mode can be excited only at the tube input and output. There is no possibility of an exchange between the fast and the slow mode elsewhere, since these two modes are orthogonal. The investigation which follows does not account for disturbancesdue to resonance of the tube body but can be adapted to that case with little modification.

Notation is given in Fig.I.1.

Indices E, S, L. R, respectively, for : input, output, slow wave and fast wave.

Signs + or - respectively for an incident wave or a reflected wave with respect to the junction.

Voltages are referred to arbitrary reference planes but which are very close to the corresponding junction.

The slow wave has an attenuation A and an electronic gain, $G_o$ so that the total gain(in voltage) is $G = A\ G_o$.

Phase shift between the input and the output is respectively, $\varphi_L$ and $\varphi_R$ for the slow and the fast wave.

It is provisionally assumed that the fast wave is unattenuated.

We have at the input :

$$\begin{pmatrix} V_E^- \\ V_L^- \\ V_R^- \end{pmatrix} = (S) \begin{pmatrix} V_E^+ \\ V_L^+ \\ V_R^+ \end{pmatrix} \qquad \text{I(1)}$$

where (S) is the scattering matrix :

$$(S) = \begin{pmatrix} \rho_E & T_{EL} & T_{ER} \\ T_{EL} & \rho_L & T_{LR} \\ T_{ER} & T_{LR} & \rho_R \end{pmatrix} \qquad \text{I.(2)}$$

(S) is symmetrical and unitary : $(S).(S^*) = (I)$ where (I) is the unit matrix.

It is assumed that the output transformer is identical to the input transformer, hence :

$$\begin{pmatrix} V_S \\ V_L'^- \\ V_R'^- \end{pmatrix} = (S) \begin{pmatrix} 0 \\ V_L'^+ \\ V_R'^+ \end{pmatrix} \qquad \text{I.(3)}$$

Also :

$$\begin{cases} V_L'^- = \frac{1}{A}\, e^{j\theta_L}\, V_L^+ \\ V_R'^- = e^{j\theta_R}\, V_R^+ \\ V_L'^+ = G\, e^{-j\theta_L}\, V_L^- \\ V_R'^+ = e^{-j\theta_R}\, V_R^- \end{cases} \qquad \text{I.(4)}$$

Attention here is given to the tube's effective gain. i.e. to the ratio between the output and input voltages. Eliminating the other variables between I.(1) and I.(3) and I.(4), we obtain :

$$\frac{V_S}{V_E} = \frac{e^{j\theta_L}\left[T_{ER}^2 - GA\, e^{-2j\theta_L}\left(\rho_L T_{ER} - T_{EL} T_{LR}\right)^2\right] + G\, e^{j\theta_R}\left[T_{EL}^2 - e^{-2j\theta_R}\left(\rho_R T_{EL} - T_{LR} T_{ER}\right)^2\right]}{GA\, e^{-j(\theta_L+\theta_R)}\left[\left(T_{LR}^2 - \rho_R \rho_L\right)^2 - \rho_L^2\, e^{2j\theta_R}\right] + e^{j(\theta_L+\theta_R)}\left[1 - \rho_R^2\, e^{-2j\theta_R}\right] - T_{LR}^2 (A+G)} \qquad \text{I.(5)}$$

A few special cases will now be considered :

1) <u>No coupling with the fast mode</u>

All that is required is to put in I.(5) :

$$T_{ER} = T_{ER} = 0 \qquad \text{Hence : } \rho_R = 1$$

and : $\rho_L = \rho_E = \rho$

$$\frac{V_S}{V_E} = \frac{T_{EL}^2\, G\, e^{-j\theta_L}}{1 - \rho^2 GA\, e^{-2j\theta_L}} \qquad \text{I.(6)}$$

In particular the tube begins to oscillate when the denominator is 0 : $\rho^2 G A e^{-2j\theta_L} = 1$ , this relation being evident. So the gain has to satisfy :

$$G < 1/\rho^2 A$$

Power gain is given by :

$$\frac{P_S}{P_E} = \left|\frac{V_S}{V_E}\right|^2 = \frac{G^2(1-\rho^2)^2}{1 + G^2\rho^4 A^2 - 2\rho^2 GA \cos 2\theta_L}$$

Generally $\rho^4 G^2 A^2 \ll 1$ hence :

$$\frac{P_S}{P_E} = \frac{G^2(1-\rho^2)^2}{1 - 2\rho^2 GA \cos 2\theta_L} \qquad \text{I.(7)}$$

Taking a total gain of 20 dB (G = 10), a 10 dB attenuation : A $\sim$ 0,3, a VSWR of 1,5 : $\rho$ = 0,2, power gain will vary from 80 to 13 0 for a variation $\Delta\theta_L = \frac{\pi}{2}$ , which is large considering that we are dealing with common values.

The real gain variations are generally less, since a TPOM is often operated under saturated conditions.

2) Infinite attenuation on the line

Assuming that there is no beam : $G_e = 1$, and that the line attenuation is infinite, we have A = 0.

I.(5) gives in this case :

$$\frac{V_S}{V_E} = \frac{T_{ER}^2 \, e^{-j\theta_R}}{1 - \rho_R^2 \, e^{-2j\theta_R}} \qquad \text{I.(8)}$$

This provides means for measuring the parameters related to the fast mode. For example maximum and minimum transmission are measured :

$$\left(\frac{P_S}{P_E}\right)_{max} = \frac{|T_{ER}|^4}{\left[1 - |\rho_R|^2\right]^2}$$

$$\left(\frac{P_S}{P_E}\right)_{min} = \frac{|T_{ER}|^4}{\left(1 + |\rho_R|^2\right)^2}$$

This gives two relations which will permit the determination of :

$T_{ER}$, $\rho_R$ and $T_{EL}$.

Assuming that radiation is slight that the input - fast wave transmission is of the same order as the transmission from the slow wave to the fast wave, or $T_{ER} \sim T_{EL} \to 0$ then $\rho_R$ tends to unity, because $|T_{LR}|^2 + |T_{ER}|^2 + |\rho_R|^2 = 1$. Under these conditions I.(8) yields :

$$\left| \frac{V_S}{V_E} \right|_{MAX} = \frac{|T_{ER}|^2}{1 - |\rho_R|^2} \quad \frac{1}{1 + \left| \frac{T_{LR}}{T_{ER}} \right|^2} \sim \frac{1}{2} \qquad \text{I.(9)}$$

a result which is certainly not obtained under usual conditions. This is due to the fact that, in the case of the fast mode, losses have been neglected. Even when these losses are small they considerably alter the result. The case considered above is actually a resonance of the fast mode, damped only by the power transmitted at the two ends, to the input, the output and the line. Since we have assumed that these losses are very small, the Q factor is very high, and result I.(9) becomes plausible.

It is therefore necessary to take losses of the fast mode into account. All that is required is to replace, in I (8), $\theta_R$ by $\theta_R - j\alpha_R \ell$ where : $\ell$ is the length of the line, $\alpha_R$ is the attenuation constant of the fast mode.

Relation I (8) then becomes I (10) :

$$\frac{V_S}{V_E} = \frac{e^{-j\theta_R} T_{ER}^2 e^{-\alpha_R \ell}}{1 - e^{-2\alpha_R \ell} \rho_R^2 e^{-2j\theta_R}} \qquad \text{I (10)}$$

Hence :

$$\left|\frac{V_S}{V_E}\right|_{max} = \frac{|T_{ER}|^2 e^{-\alpha_R \ell}}{1 - e^{-2\alpha_R \ell} |\rho_R|^2} \qquad \text{I (11)}$$

this result differing considerably from I (9), even in the case of very low losses. For example : $e^{-\alpha_R \ell} = 0{,}9$, $|T_{ER}|^2 = 0{,}01$, hence $\rho_R \sim 1$ (assuming that $T_{ER} \sim T_{LR}$).

Hence : $$\left|\frac{V_S}{V_E}\right|_{max} = \frac{|T_{ER}|^2 e^{-\alpha_R \ell}}{1 - e^{-2\alpha_R \ell}} = \frac{0{,}01 \times 0{,}9}{0{,}2} = 4{,}5.10^{-2}$$

It will now be shown that, in practice, all that is needed is to know $\left|\frac{V_S}{V_E}\right|_{max}$ in order to determine the admissible maximum gain. To measure $\left|\frac{V_S}{V_E}\right|_{max}$ it is of course generally necessary to use a fairly high power generator.

NOTE -

If line attenuation is high but not infinite, we have :

$$\frac{V_S}{V_E} \simeq A T_{EL}^2 + \frac{T_{ER}^2 \, e^{-\alpha_R \ell} \, e^{-j(\theta_R - \theta_L)}}{1 - \rho_R^2 \, e^{-2\alpha_R \ell} \, e^{-2j\theta_R}} \qquad \text{I.(12)}$$

3) The tube under amplifying conditions

To write the condition of oscillation it will be sufficient to make the denominator of I (5) equal to 0.

Hence :

$$e^{j(\theta_L + \theta_R)} \left(1 - G A \rho_L^2 \, e^{-2j\theta_L}\right)\left(1 - \rho_R^2 \, e^{-2\alpha_R \ell} \, e^{-2j\theta_R}\right) = e^{-\alpha_R \ell} T_{LR}^2 (A + G) \qquad \text{I.(13)}$$

In the case of the most unfavourable phases :

$$\left(1 - G A \rho_L^2\right)\left(1 - \rho_R^2 \, e^{-2\alpha_R \ell}\right) = e^{-\alpha_R \ell} T_{LR}^2 (A + G)$$

To avoid oscillation, the gain G will have to be less than :

$$G_{osc} = \frac{1 - A\left(\dfrac{T_{LR}^2 \, e^{-\alpha_R \ell}}{1 - \rho_R^2 \, e^{-2\alpha_R \ell}}\right)}{\rho_L^2 A + \left(\dfrac{T_{LR}^2 \, e^{-\alpha_R \ell}}{1 - \rho_R^2 \, e^{-2\alpha_R \ell}}\right)} \qquad \text{I.(14)}$$

Assuming $T_{ER} \sim T_{LR}$, which is probably true, some idea of maximum acceptable gain can be obtained by measuring $\rho_L \sim \rho_E$, A, and $\left|\frac{V_s}{V_E}\right|_{max}$ under the conditions given in the preceding paragraph :

$$G_{osc} \simeq \frac{1 - \left|\frac{V_s}{V_E}\right|_{max}}{\rho_L^2 A + \left|\frac{V_s}{V_E}\right|_{max}} \sim \frac{1}{\rho_L^2 A + \left|\frac{V_s}{V_E}\right|_{max}} \quad \text{I (15)}$$

The fast mode losses naturally play an important part, as already mentioned. Assuming these losses are nil, and $T_{ER} = T_{LR}$, I (14) gives the father low critical gain :

$$G_{osc} = \frac{2 - A}{1 + 2\rho_L^2 A} \leq 2$$

- Conclusion -

Means have been shown whereby parameters related to the fast mode of a TPOM can be determined. This method of measurement has the advantage of requiring no modification (such as additional outputs on the sole-plate) liable to perturb this measurement. From the results obtained maximum admissible gain can be predicted.

No account has been taken in this investigation of radiation from the input to the gun and from the output to the collector, this radiation contributing to the excitation of resonances in the box of the tube. The problem is of course similar. The principle indicated for this measurement is still valid : in both cases, $\left|\frac{V_s}{V_E}\right|_{max}$ measures approximately the amplitude of reaction from the output to the input, connected with radiation.

-:-:-:-:-

## II - REDUCTION OF THE FAST MODE -

The following methods are available :

1) The fast mode is attenuated, the preceding results showing that this is effective. But this attenuation is not easily obtained in practice for the fast mode impedance is generally rather high. Damping of resonance in the tube box sets a similar problem.

2) A mode taper is used in order to avoid radiation by the driving transformers. This method, due to J. Arnaud (5), consists in progressively modifying the finger cross-section, the distances between the fingers and the ground , and between the fingers and the sole over a length of several sections, starting from the input end, so as to secure a progressive change in the ratio of the corresponding capacities.

By applying a certain law of variation for these capacity ratios, the fast mode is not excited. Adjustments are fairly critical and require a great deal of care.

---

(5) J. Arnaud : "Study of fast mode interaction in Crossed-Field Amplifier". CSF contract Raytheon n°22 WR 826 - January 1962.

3) Without taking any special precautions as regards the excitation of the fast mode at the driving transformers, the propagation conditions for this mode are modified to make it evanescent within the useful band. Let us assume that the sole-plate is short-circuited by the sides on the line unit. This gives a closed section in which the fast mode is propagated as in a kind of ridge waveguide. The cut-off frequency of this waveguide has only to be higher than the high-frequency cut-off of the useful mode under evanescent conditions. Naturally, the sole-plate has to be insulated from the line unit when the tube is in operation, but measurements has shown that if this insulation is secured by means of a sufficiently thin layer having a sufficiently high dielectric constant, results are not very different. At the same time conditions are secured which permit solving the loss problem more easily, (low impedance), by superimposing a dielectric an attenuating layer.

To decouple the outputs from the tube box resonance, this cut-off waveguide must not only cover the line, but must also extend on the gun and on the collector sides.

-:-:-:-:-

## III - DESIGN OF A TPOM FOR L BAND -

A TPOM for CW operation in L band has been constructed. Since the object was to reduce instability and noise, high performance as regards power and frequency band was not aimed at.

It is a laboratory tube designed to permit easy modifications, such as to gun, the line, the sole.

The different tube components and connection points are mounted on a water-cooled platform insulated by a cover and "O" ring seal. The tube is continuously evacuated (Fig.III.1) and its general cut-view is shown in Fig.III.2.

### Line characteristics

First, experiments will be conducted on an interdigital line working on the first direct harmonic. This line is easily constructed (electro-erosion) but its coupling resistance for the harmonic mentioned is low and varies rapidly over the band.

The dimensions of the line are shown in Fig.III.3 and its dispersion curve in Fig.III.4.

The coupling resistance was investigated by an analogic method which gave a choice of favourable dimensions from this point of view. The principle of this method is described in Appendix Fig. III.5 shows the variations of $R_{cl}(\varphi)$ (coupling resistance of harmonic 1 in the middle and at the level of the line) against the fundamental phase shift $\phi$ ( $0 \leq \varphi \leq 2\pi$ ), for various values of a form factor $\alpha$ (ratio of interdigital space to distance between fingers).

It should be mentioned that all the dimensions are as shown in Fig.III.3, except for the finger width which is set at $\alpha = 0,5$ on this figure. Fig.III.5 shows that the most useful coupling resistance is obtained : for $\alpha$ about 0,5. In the case of wider fingers, the coupling resistance is lower over the whole band. For narrower fingers the coupling resistance is higher, for $\phi$ less than $\pi$ , and lower for $\phi$ greater than $\pi$ , so its variation over the ban greater.

Sole-plate : (Fig.III.6)

The sole-plate is insulated from the line by a thin dielectric layer. Originally it had been proposed to fcoat the sole-plate with a layer of enamel 0,6 mm thick, This operation met with several failures, either during baking, on account of excessive temperature gradient or during grinding. It is now proposed to obtain this insulation either by using a strip of steatite, or by sputtering alumina.

Gun (Fig.III.7)

Trajectories have been plotted neglecting space charge. The result is that, with the dimensions mentioned, injection is approximately laminar.

Guns more specially dosigned for low noise will be mounted later.

Operating conditions

The values given were obtained with the following criteria : high gain for low applied power, reasonable space charge, with no attempt to obtain high efficiency.

| | |
|---|---|
| Delay | $\tau = 22$ |
| Applied power | $P_0 = 500$ watts |
| Critical magnetic field | $B_c = 370$ gauss |
| Magnetic field | $B = 440$ gauss |
| | $\frac{B}{B_c} = 1,2$ |
| Line voltage | $V_0 = 3000$ v |
| Sole-plate voltage | $V_s = 600$ v |
| Line sole-plate distance | $d = 6$ mm |
| Distance between line and zero equipotential surface | $d_0 = 5$ mm |
| Cathode current | $I_0 = 170$ mA |
| Beam impedance | $Z_0 = 18$ |
| Wavelength | $\lambda = 18$ cm |
| Propagation constant | $\beta = \frac{2\pi}{\lambda}\tau = 2,4\pi$ rad/cm |
| Mean distance from beam to line | $d_g = 3,4$ mm |
| Coupling resistance | $R = 30$ ohms |

W.R. 971

Circuit gain : $\gamma_0 = \beta \sqrt{\frac{\beta d_0 R}{Z_0}}\, \ell^{-\beta d_g} = 5{,}5 \ 10^{-2}$ Np/cm

Diocotron gain : $\gamma_c = \frac{\beta d_0 \tau}{2\ell} \frac{374}{Z_0} = 20{,}7 \ 10^{-2}$ Np/cm

$$\alpha = \frac{\gamma_c}{\gamma_0} = 3{,}7$$

Total gain : $\gamma = \sqrt{\gamma_0^2 + \gamma_c^2} = 0{,}22$ Np/cm

Voltage gain for a line length of $\ell = 35$ cm :

$$G = \frac{ch\,\gamma\ell + \alpha^2}{1 + \alpha^2} = 65 \sim 36 \text{ dB}$$

-:-:-:-:-

# IV - EXPERIMENTAL RESULTS -

## IV.1. Matching

The line impedance is about 300 ohms. Matching is facilitated by widening the first finger (3,5 mm instead of 2,5 mm). The line is driven from the end of the finger. With a coaxial transformer 13 mm long, and a characteristic impedance of 85 ohms, an acceptable value of VSWR is obtained (Fig. IV.1).

## IV.2. Transmission

The sole-plate used for these measurements did not have correct dimensions, neither did it have the accuracy of the sole-plate to be used in the tube, as regards parallelism and centering. So measurements will be repeated under better conditions. Fig.4.2 shows the transmission with RF-short-circuit and insulated sole-sides. Radiation near the high frequency cut-off is distinctly less in the case of the short-circuited sole-plate.

## IV.3. Direct radiation measurement

Those measurements were based on the method described in chapter 1 : the line is strongly attenuated (over 60 dB) and transmission was measured. To secure a sufficiently high input, the signal from a Ferisol

generator was amplified by a TPO.153 A. This gave a power of about one watt.

These measurements show that the method using a cut-off waveguide is insufficient to avoid coupling with the resonances of the tube box. But the attenuation of the fast mode at low impedance is effective. Only the results concerning the latter case will be described. The other series of measurements will be resumed under better conditions with the correct sole-plate, and results will be given in the next report.

Figure IV.3 shows the transmission curve of the totally attenuated line, with sole-plate and cover, for the three following cases :

1/ - Normal sole-plate

2/ - Low-impedance sole-plate (two teflon strips 0,5 mm thick)

3/ - Attenuated low-impedance sole-plate (a strip of graphited paper is superimposed on each teflon strip).

It is found that the low-impedance sole-plate radiates less than the normal. The low-impedance attenuation seems to be quite effective.

It should be noted that these curves give maximum admissible gain directly, limitation being due to radiation only. That due to reflections is neglected.

-:-:-:-:-

## PROGRAMME FOR THE NEXT PERIOD

Work will continue on measurements aiming at reducing the fast mode.

Tests will begin on the tube in operation.

-:-:-:-:-

## Appendix A

### DETERMINATION OF COUPLING RESISTANCE

Coupling resistance is defined by :

A.1 $$R_n(\varphi) = \frac{|E_{z,n}(\varphi)|^2}{2\beta_n^2 P}$$

where $E_{z,n}$ is the longitudinal component of the particular $n^{th}$ harmonic, $\beta_n$ is the propagation constant for that harmonic, and P is the power transmitted.

Determination of the space harmonic amplitude.

All the quantities are defined at line level. Axis $Ox$ is parallel to the fingers, $Oz$ is perpendicular to the fingers and in the plane of the line. A space harmonic is defined by :

$$E_{z,n}(x,\varphi) = \frac{1}{r}\int_0^r E_z(x,\varphi)\, e^{j\frac{\varphi+2n\pi}{r}z}\, dz$$

A-2 $$= j\frac{\varphi+2n\pi}{r} V_n(x,\varphi) = j\frac{\varphi+2n\pi}{r}\int_0^r V(xz)\, e^{j\frac{\varphi+2n\pi}{r}z}\, dz$$

Consider a section of line and the two potential distributions shown below :

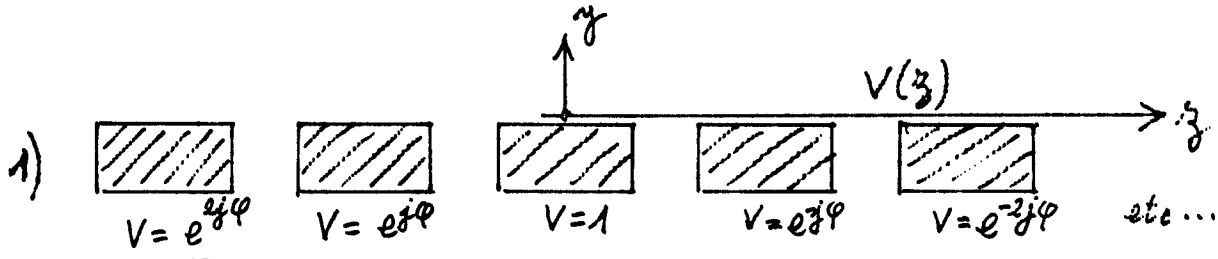


Fig A-1

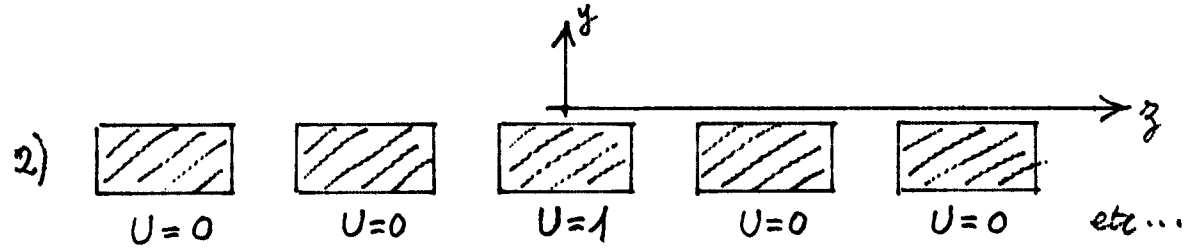


Fig A-2

It has been shown (*) that $V_n(\varphi) = U_n(\varphi)$

where
$$U_n(\varphi) = \frac{1}{\tau}\int_{-\infty}^{+\infty} U(z)\, e^{j\frac{\varphi+2n\pi}{\tau}z} \qquad \text{A.3.}$$

and $V_n(\varphi)$ is the $n^{th}$ space harmonic for $V(z)$ corresponding to Fig.A.1.

(*) Demonstration by B, EPZSTEIN and J. ARNAUD.

$U_n(\varphi)$ can be determined by an analog method (graphited paper). Knowing $U_n(\varphi)$ , $E_{z,n}(\varphi)$ is obtained by formula A.1.

For an interdigital line, if V is the voltage amplitude at the end of a finger, we have : if $n$ is even :

$$E_{z,n}(\varphi, x) = \frac{\varphi + 2n\pi}{p} \frac{V U_n(\varphi)}{\sin \frac{k\ell}{2}} \sin kx \qquad \text{A.4.}$$

If $n$ is odd :

$$E_{z,n}(\varphi, x) = \frac{\varphi + 2n\pi}{\gamma} \frac{V\, U_n(\varphi)}{\cos \frac{kl}{2}} \cos kx$$

Determination of power transmitted

With V defined as in the preceding paragraph,
$\gamma_1$ the capacity between two adjacent fingers
$\gamma_0$ " " " the fingers and the ground
$l$ the finger length

we have :

$$P = \frac{c\gamma_1}{2} V^2 \frac{\sin \frac{\varphi}{2}}{\sin kl} \qquad \text{A.5}$$

where $\varphi$ and $kl$ are related by the dispersion, whose theoretical value is :

$$\cos \frac{\varphi}{2} = \left(1 + \frac{\gamma_0}{2\gamma_1}\right) \cos kl \qquad \text{A.6}$$

$\gamma_0$ , $\gamma_1$ are generally measured by an analog method. For the line used in this case (Fig.3.3), we have :

$\gamma_0 = 26$
$\gamma_1 = 9{,}5$

Hence : $\cos\frac{\varphi}{2} = 2{,}37 \cos kl$

It is found that this dispersion is in very good agreement with the experimental curve (Fig.3.4).

Under these conditions it can be accepted that the theoretical expression for the power transmitted is also a very good approximation.

Coupling resistance

With $U_n(\varphi)$ measured as shown above, and the theoretical expression for $P$ being justified in the case of our particular line, we have :

$$R_n(\varphi, x) = \frac{2\, U_n^2(\varphi)\, tg\, \frac{kl}{2}}{c\, \gamma_1\, \sin\frac{\varphi}{2}} \times \begin{cases} \cos^2 kx & (n \text{ odd}) \\ \sin^2 kx & (n \text{ even}) \end{cases} \qquad \text{A.7}$$

In the case of rectangular fingers closely spaced, the voltage varies approximately linearly between two fingers. On this assumption :

$$U_n(\varphi) = \frac{1}{2}\, \frac{\sin\left(\frac{\varphi}{4} + n\frac{\pi}{2}\right)}{\frac{\varphi}{4} + n\frac{\pi}{2}} \times \frac{\sin\alpha\left(\frac{\varphi}{4} + n\frac{\pi}{2}\right)}{\alpha\left(\frac{\varphi}{4} + n\frac{\pi}{2}\right)} \qquad \text{A.8}$$

where $\alpha$ is defined in Fig.3.5.

It has been verified on two examples that the value of $U_n(\varphi)$ obtained from A-8 is in excellent agreement (of the order of 1% ) with the results of measurement by the analog method.

In conclusion, sufficiently accurate results are obtained in the case of the type of line being considered here, by applying A-6 for dispersion, A-8. for the space harmonic amplitude, and A-7 for the coupling resistance. The only measurement required is an analogue measurement of the capacities $\gamma_0$ , $\gamma_1$.

The following are obtained for the various values of $\alpha$ in Fig.3.5.

| $\alpha$ | 0,3 | 0,4 | 0,5 | 0,6 | 0,7 |
|---|---|---|---|---|---|
| $\gamma_0$ (pF/m) | 32 | 30 | 26 | 24 | 22 |
| $\gamma_1$ (pF/m) | 15 | 12 | 9,5 | 7,5 | 5,6 |

-:-:-:-:-

## LIST OF FIGURES

Fig. I.1. - Captious for chapter I.
III.1. - General View of the tube.
III.2. - General plan of the tube
III.3. - Plan of the interdigital line.
III.4. - Dispersion curve of the interdigital line.
III.5. - Coupling resistance for the harmonic m = + 1.
III.6. - Plan of the sole.
III.7. - Plan of the optical system.
IV. 1. - VSWR of the line.
IV. 2. - Insertion loss of the line.
IV. 3. - Insertion loss with infinite attenuation on the slow wave.

## LIST OF FIGURES

Fig. I.1. - Captious for chapter I.
III.1. - General View of the tube.
III.2. - General plan of the tube
III.3. - Plan of the interdigital line.
III.4. - Dispersion curve of the interdigital line.
III.5. - Coupling resistance for the harmonic m = + 1.
III.6. - Plan of the sole.
III.7. - Plan of the optical system.
IV. 1. - VSWR of the line.
IV. 2. - Insertion loss of the line.
IV. 3. - Insertion loss with infinite attenuation on the slow wave.

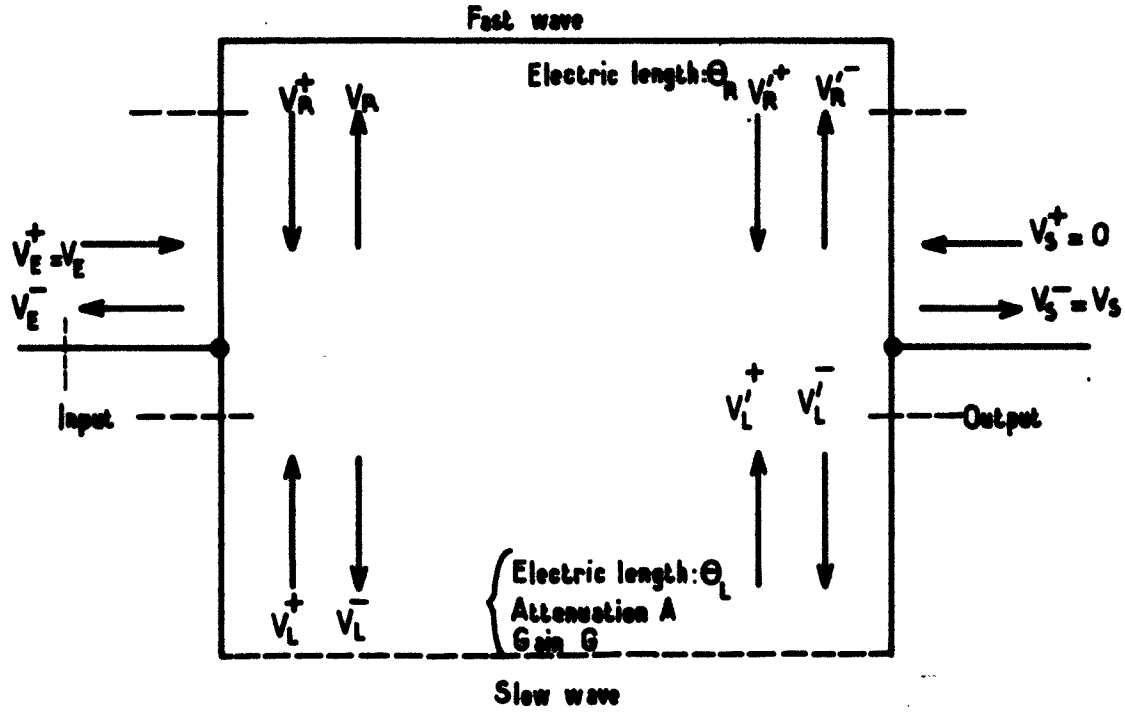
Fast wave
Electric length: $\theta_R$
$V_R^+$
$V_R$
$V_R'^+$
$V_R'^-$
$V_E^+ = V_E$
$V_E^-$
$V_S^+ = 0$
$V_S^- = V_S$
Input
$V_L'^+$
$V_L'^-$
Output
$V_L^+$
$V_L^-$
Electric length: $\theta_L$
Attenuation A
Gain G
Slow wave

Fig. I.1

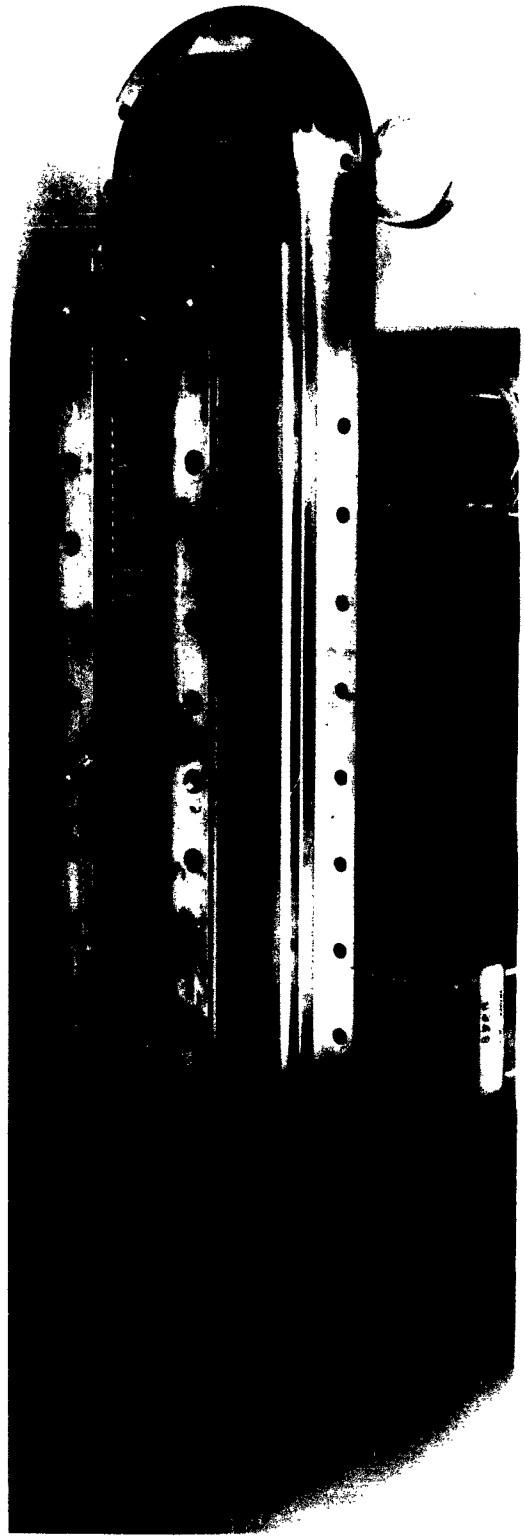

Fig. III 1

1

Coupe abcd

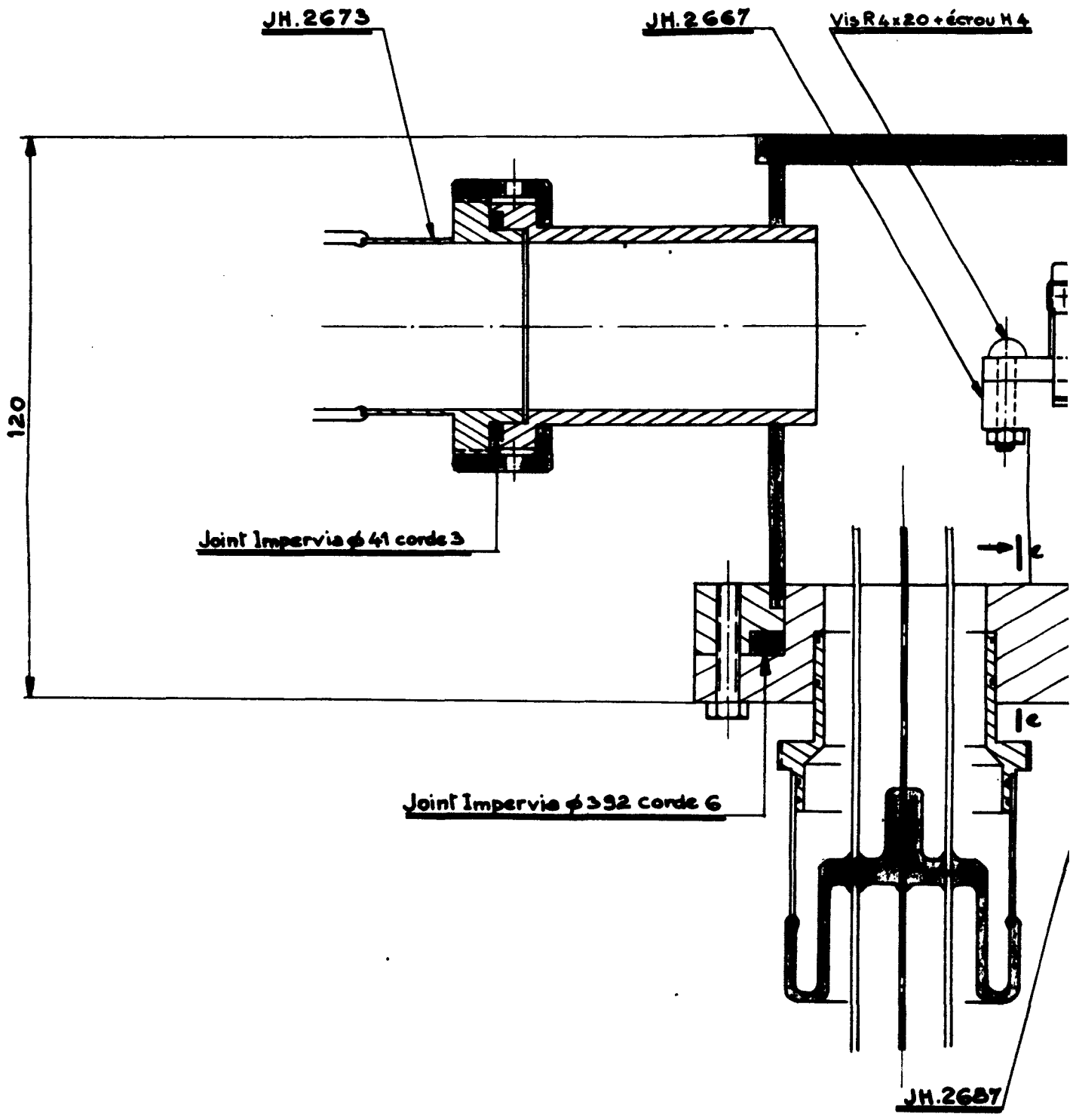
JH.2673
JH.2667
Vis R4x20 + écrou H4
120
Joint Impervia ϕ41 corde 3
Joint Impervia ϕ392 corde 6
JH.2687

Coupe abcd

2

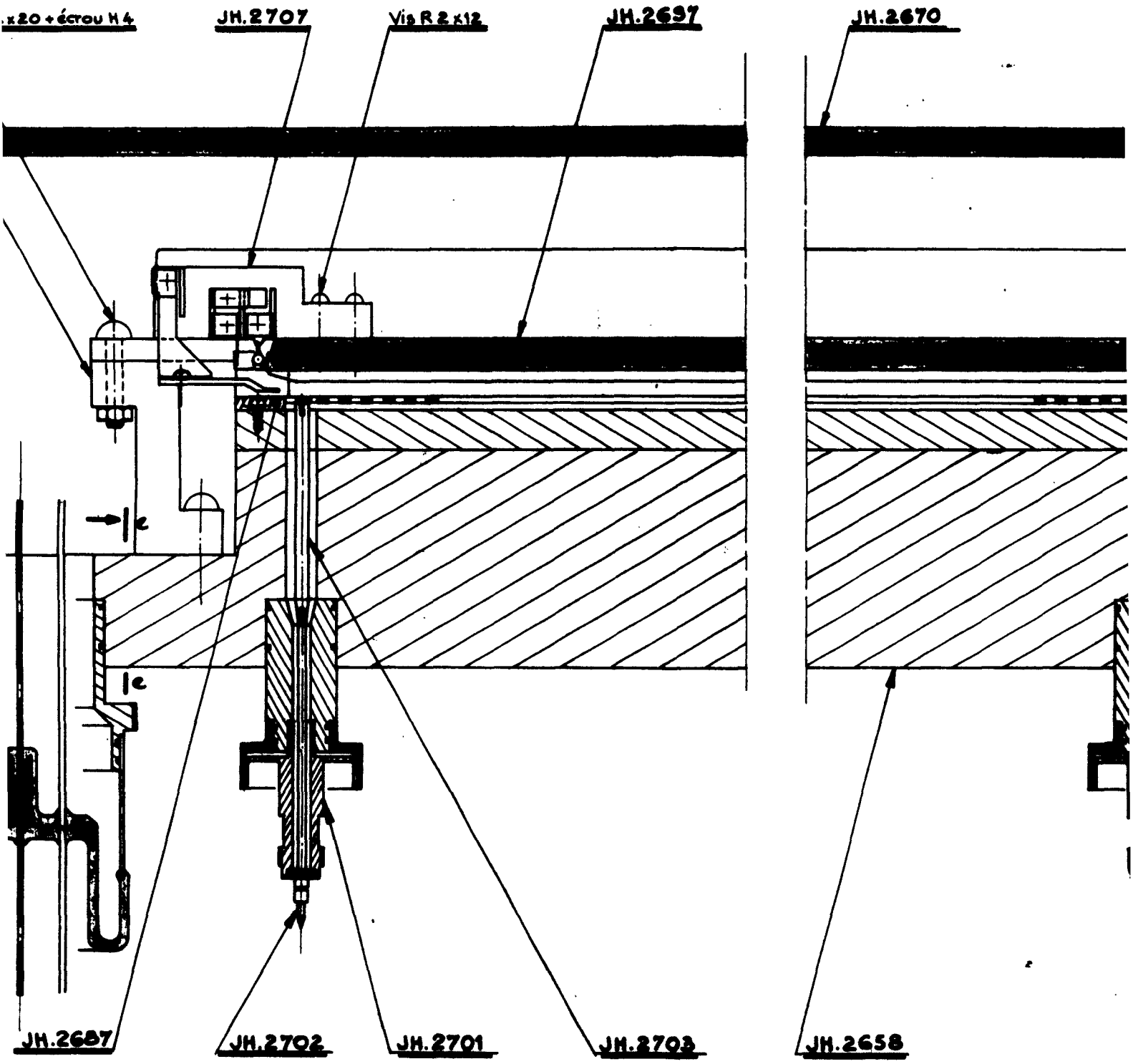

x20 + écrou H 4
JH.2707
Vis R 2 x 12
JH.2697
JH.2670
e
e
JH.2687
JH.2702
JH.2701
JH.2703
JH.2658

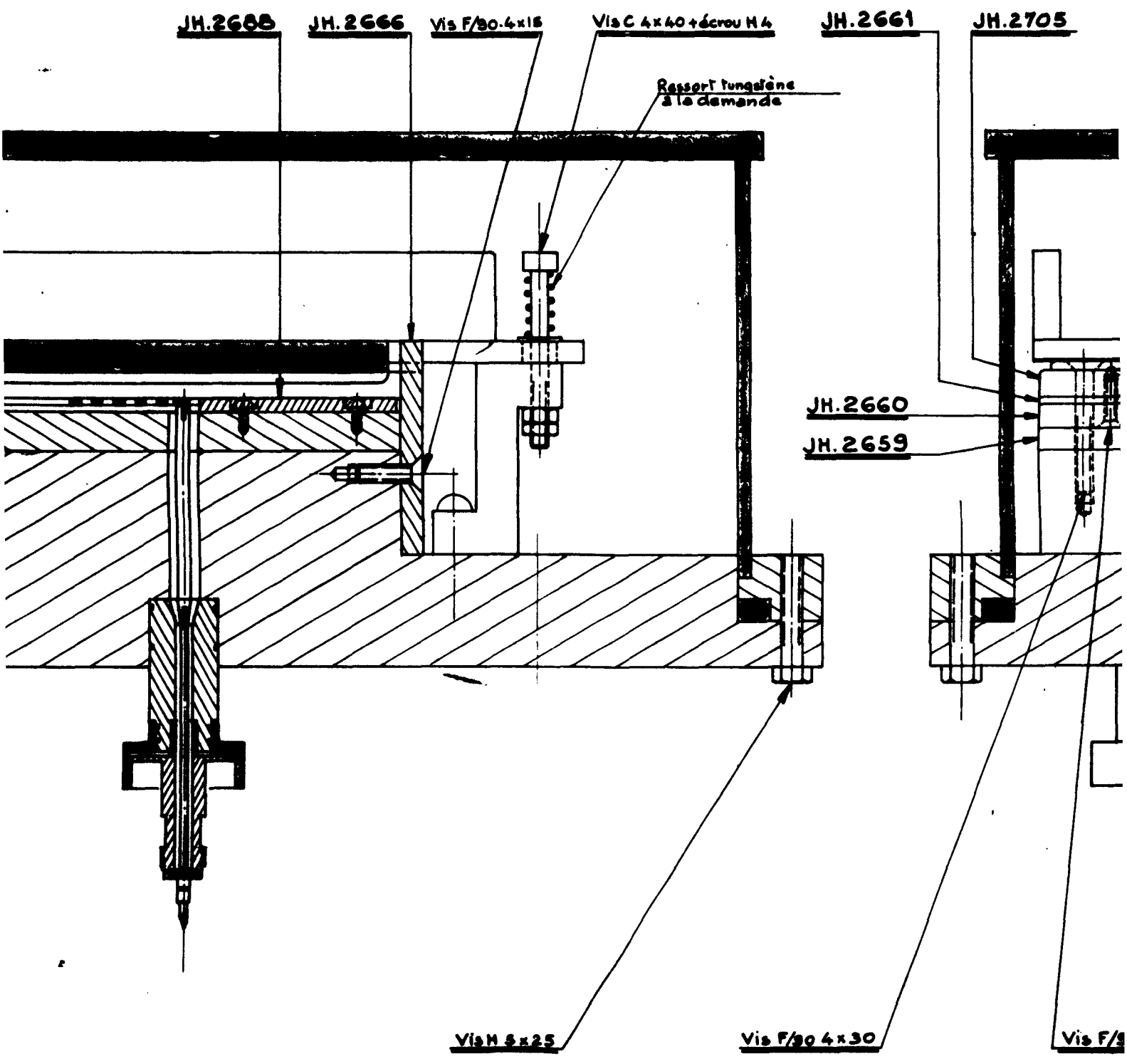
JH.2688
JH.2666
Vis F/90.4x16
Vis C 4x40 + écrou H4
JH.2661
JH.2705
Ressort tungstène à la demande
JH.2660
JH.2659
Vis H 3x25
Vis F/90 4x30
Vis F/

## Coupe e (Supports sole enlevés)

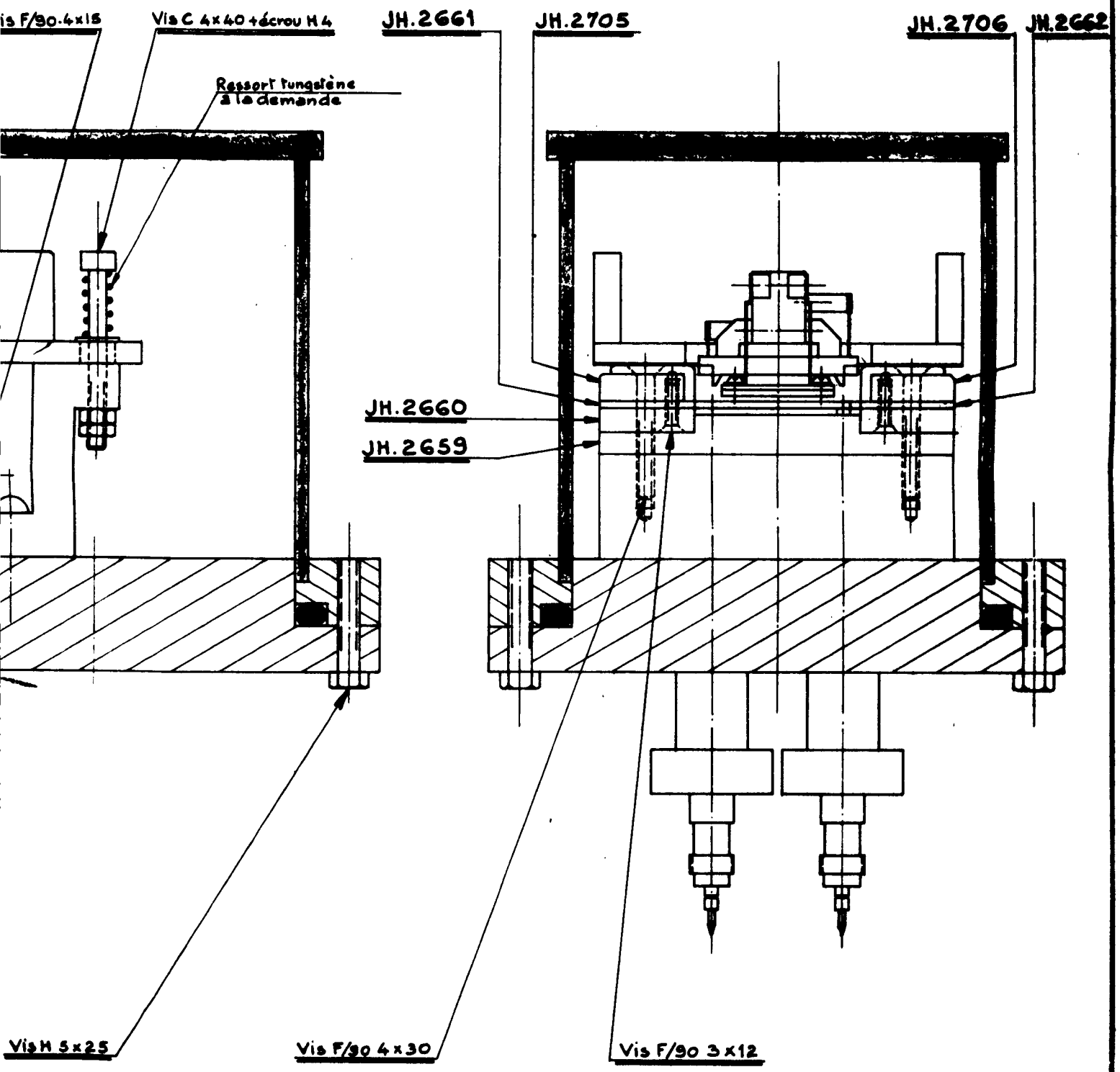

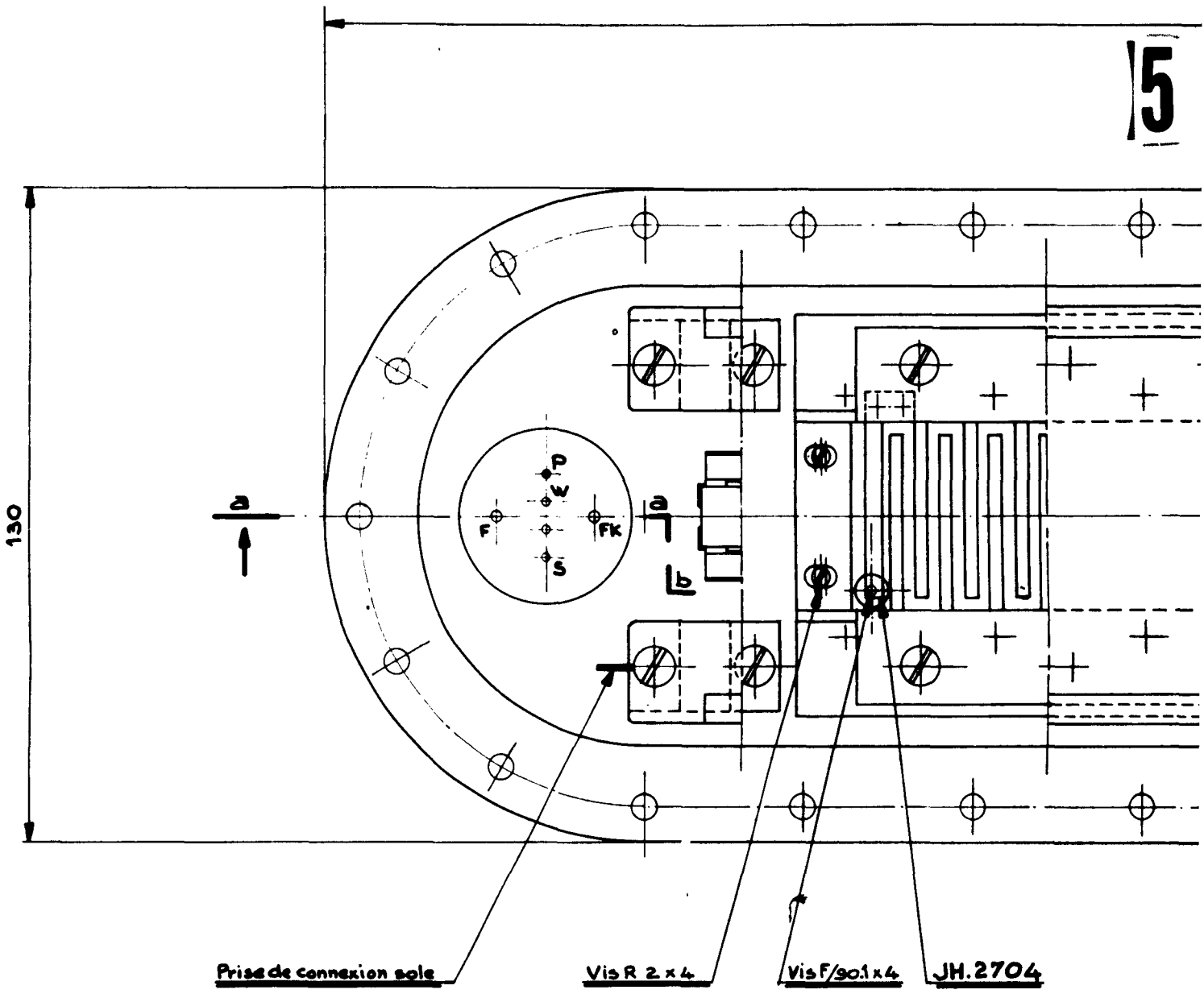
130
a
a
b
P
W
F
FK
S
Prise de connexion sole
Vis R 2 x 4
Vis F/90.1 x 4
JH.2704

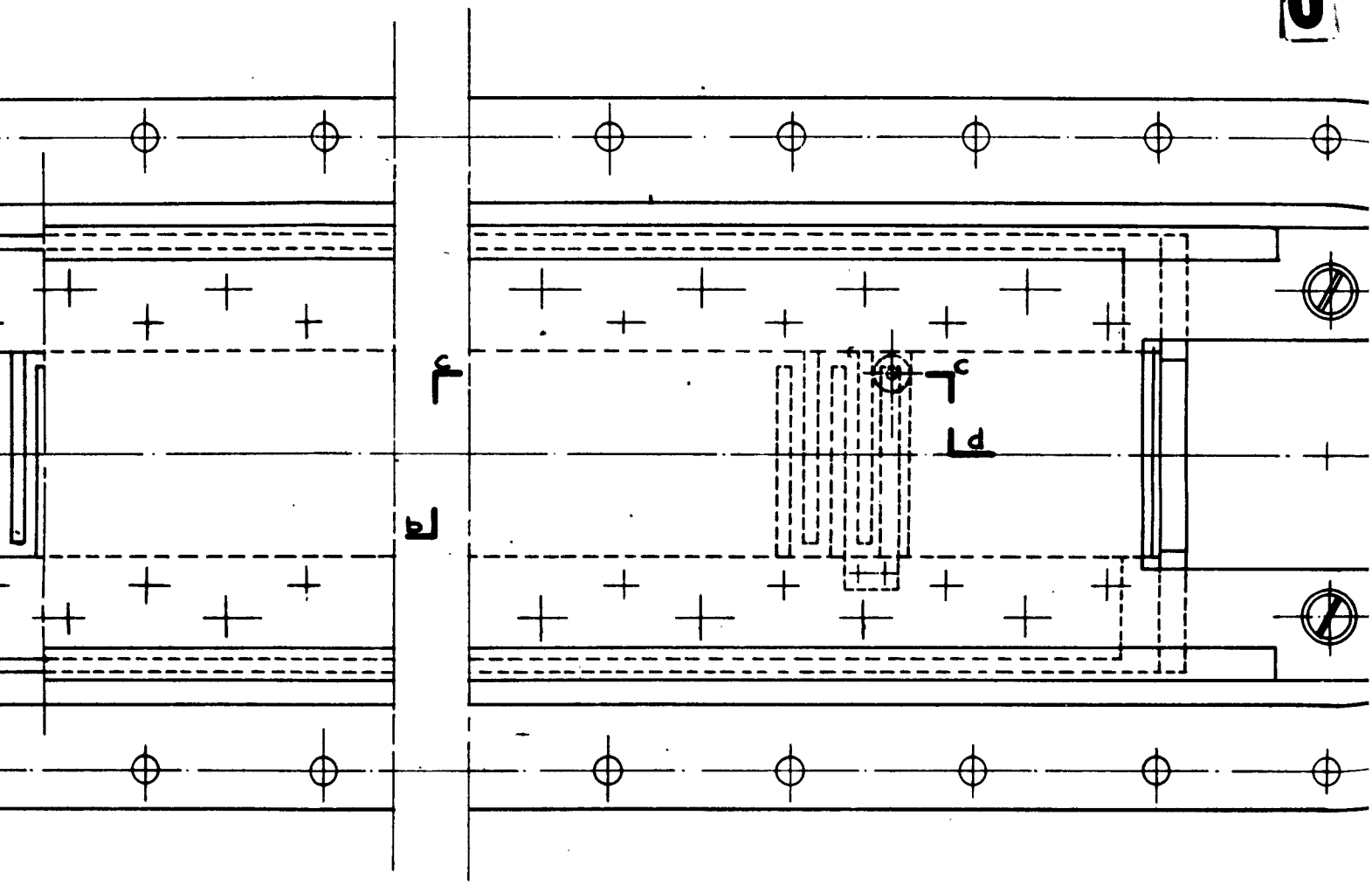


04

Vue sans couvercle

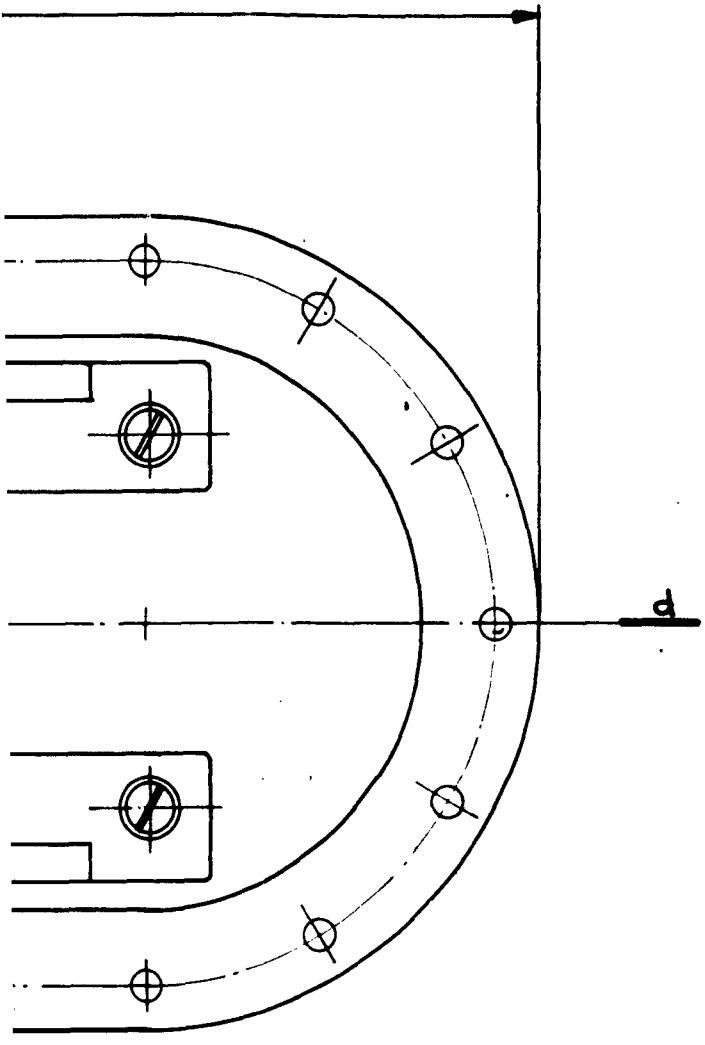


| REPERE | QUANTITE PAR APPAREIL | DESIGNATION | MATIERE | OBSERVATIONS |
|---|---|---|---|---|
| | | | | |

| ECHELLE : | DATE : | DESSINE PAR : | VERIFIE PAR : | LE CHEF DU BUREAU DE DESSIN : |
|---|---|---|---|---|
| 1/1 | 25.9.62 | H. Jaulfray | | |

| N° | DATE | MODIFICATION | VISA |
|---|---|---|---|
| | | | |

DOSSIERS :

PROPRIETE C.E.P. REPRODUCTION INTERDITE

CENTRE DE PHYSIQUE ÉLECTRONIQUE ET CORPUSCULAIRE

TPOM_Bande L . Ensemble

D. Fig. III.2

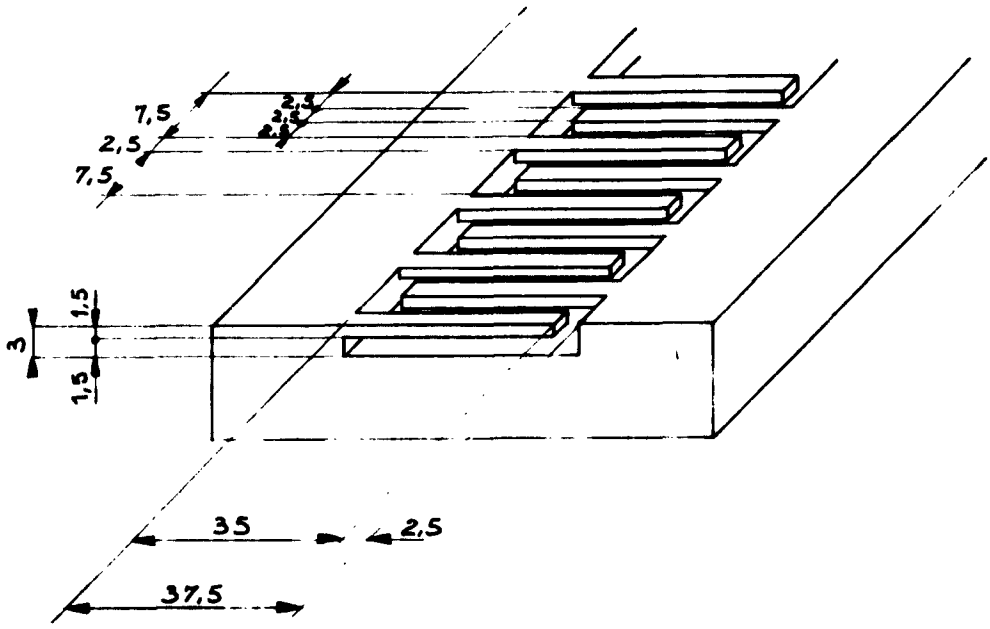


Fig. III 3

| | | | | |
|---|---|---|---|---|
| CSF | DOSSIERS : | DATE : 26.10.62 | C.E.P.E.C. | JH.2765 |
| | Bloc ligne | | | |



PHOTOGAY-LYON

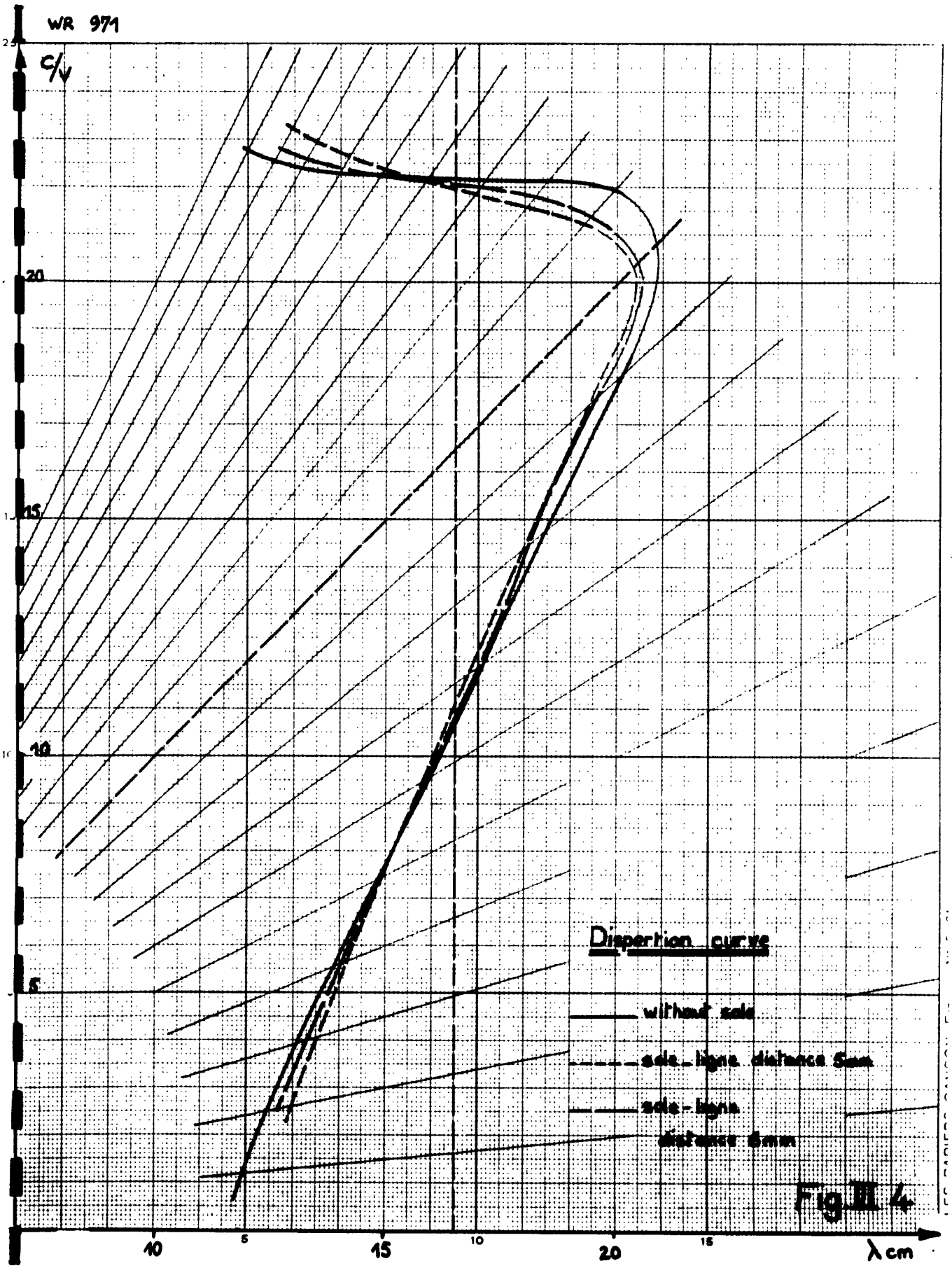
WR 971
c/v
25
20
15
10
5
Dispertion curve
without sole
sole - ligne distance 5mm
sole - ligne distance 0mm
10
5
15
10
20
15
λ cm

Fig II 4

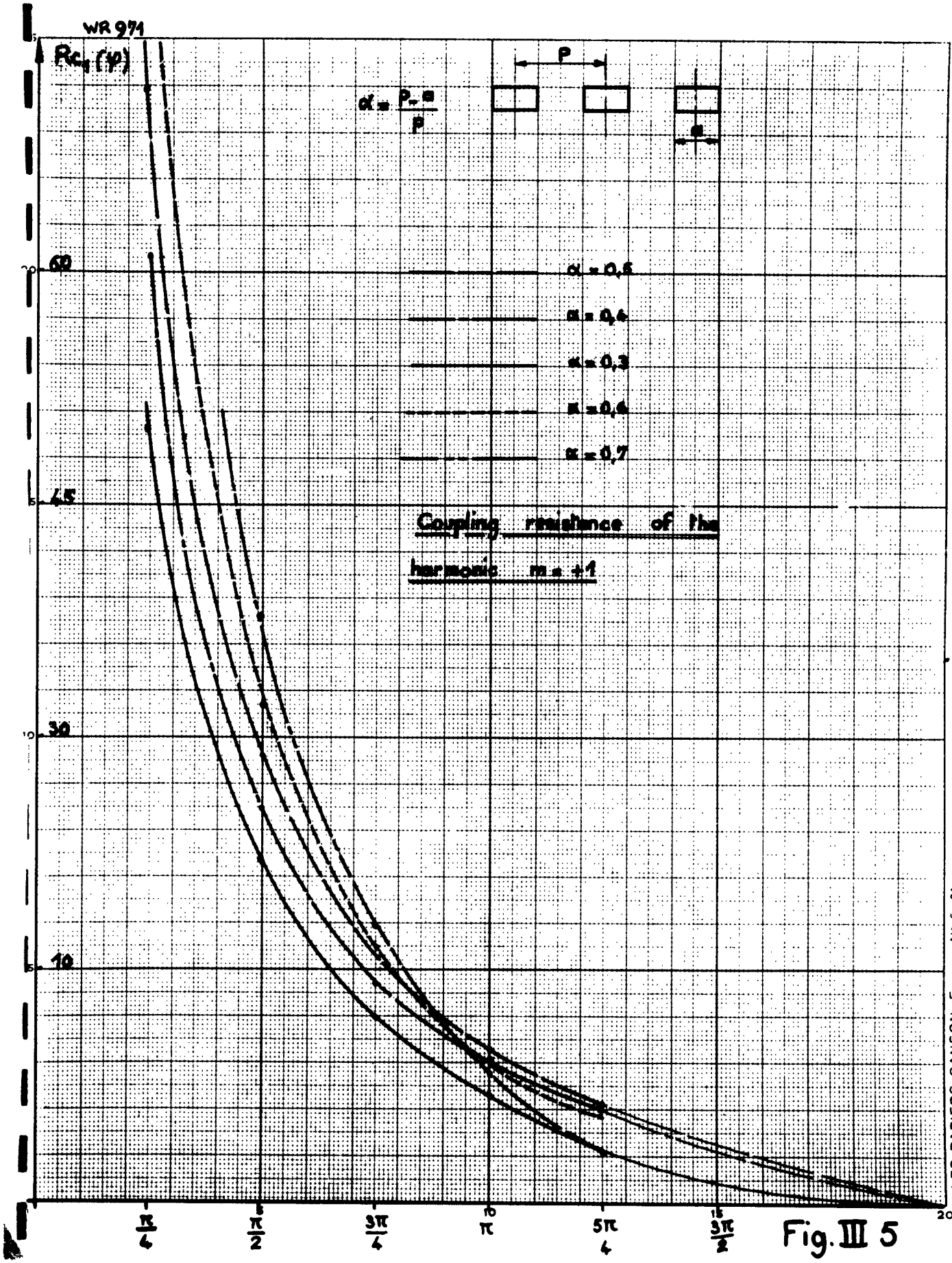
WR 971
$R_{c_1}(\psi)$
$\alpha = \frac{P-a}{P}$
P
a
$\alpha = 0,5$
$\alpha = 0,4$
$\alpha = 0,3$
$\alpha = 0,6$
$\alpha = 0,7$
Coupling resistance of the harmonic m = +1
60
45
30
10
$\frac{\pi}{4}$
$\frac{\pi}{2}$
$\frac{3\pi}{4}$
$\pi$
$\frac{5\pi}{4}$
$\frac{3\pi}{2}$
LES PAPIERS CANSON France N° 5-61

Fig. III 5

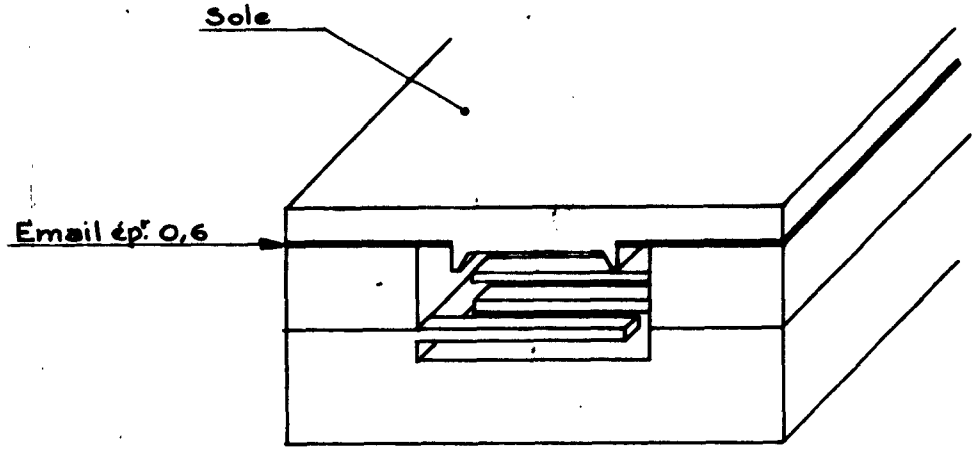


Fig III 6

| | | | | |
|---|---|---|---|---|
| GSF | DOSSIERS : | DATE : 26.10.62 | C.E.P.E.C. | JH.2766 |
| | Sole montée | | | |



PHOTOGAY LYON

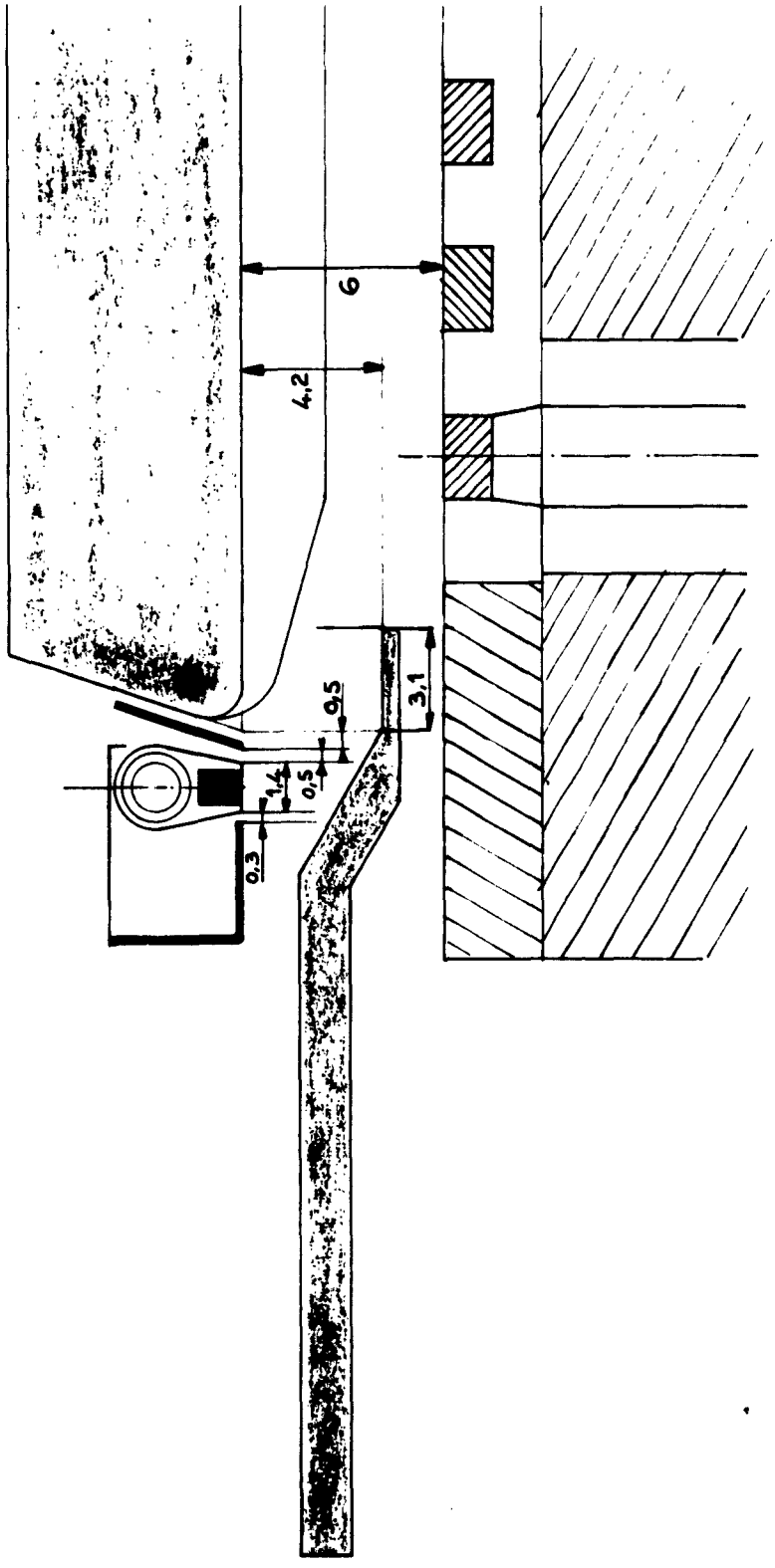


Fig III γ

| | | | | |
|---|---|---|---|---|
| CSF | DOSSIERS : | DATE : 21.9.62 | Dép' C.E.P.E.C. | JH.2707 |
| | GENERAL VIEW OF THE OPTICAL SYSTEM | | | |

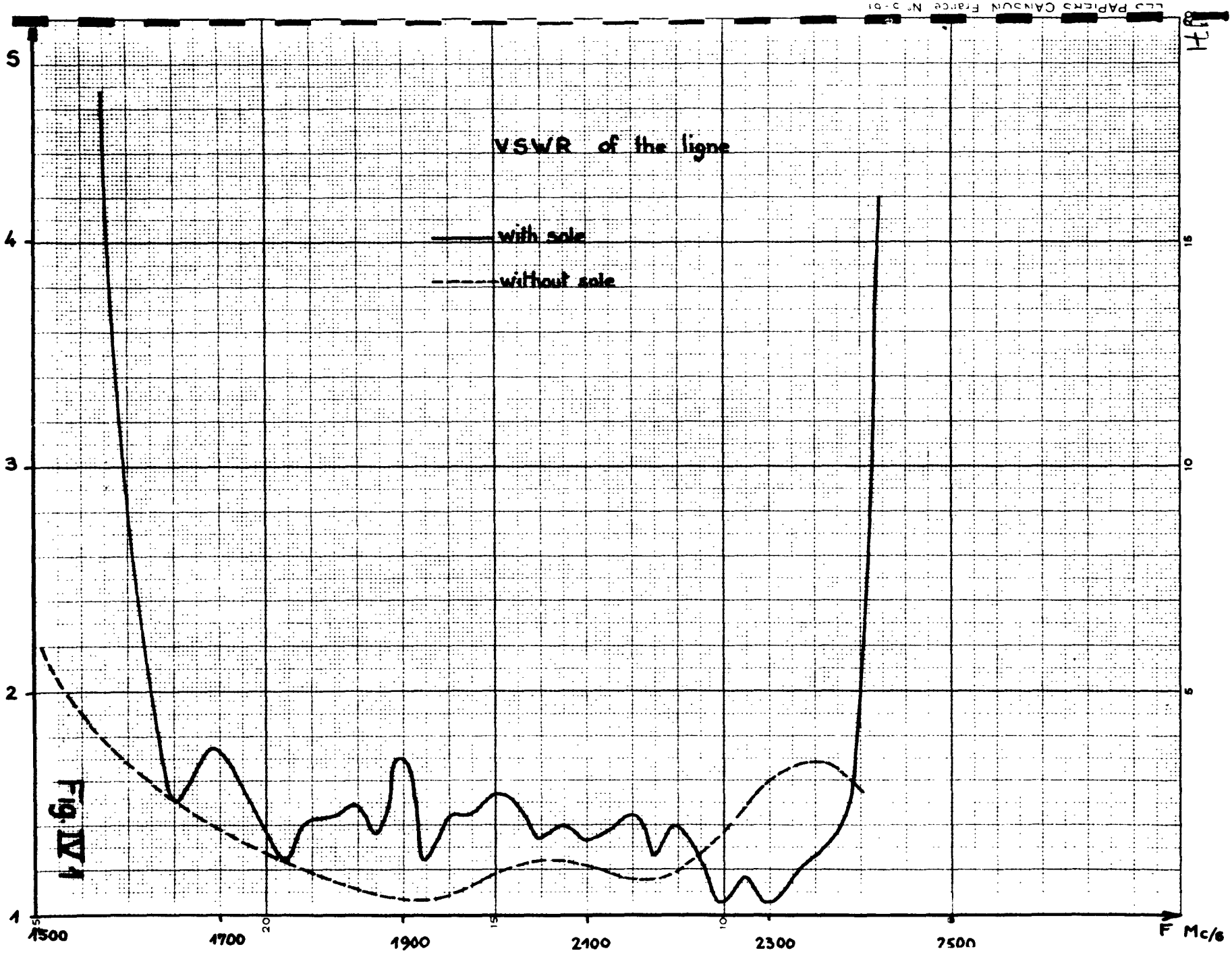
VSWR of the ligne
with sole
without sole
S
4
3
2
1
dB
15
10
5
1500
1700
1900
2100
2300
2500
F Mc/s

Fig. IV 4

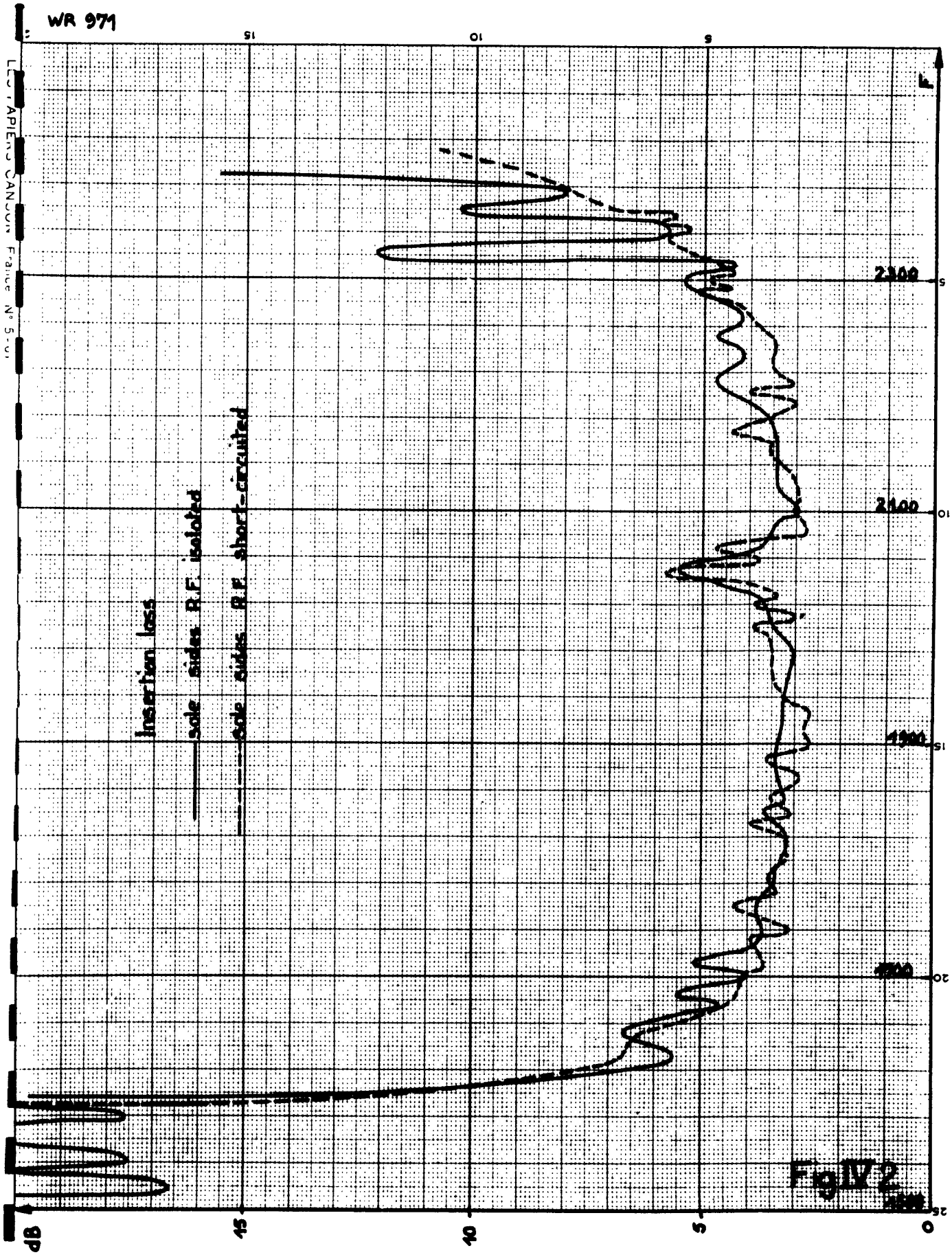
WR 971
Insertion loss
sole sides R.F. isolated
sole sides R.F. short-circuited
2300
2100
1900
1500
F
dB
15
10
5
0

Fig IV 2

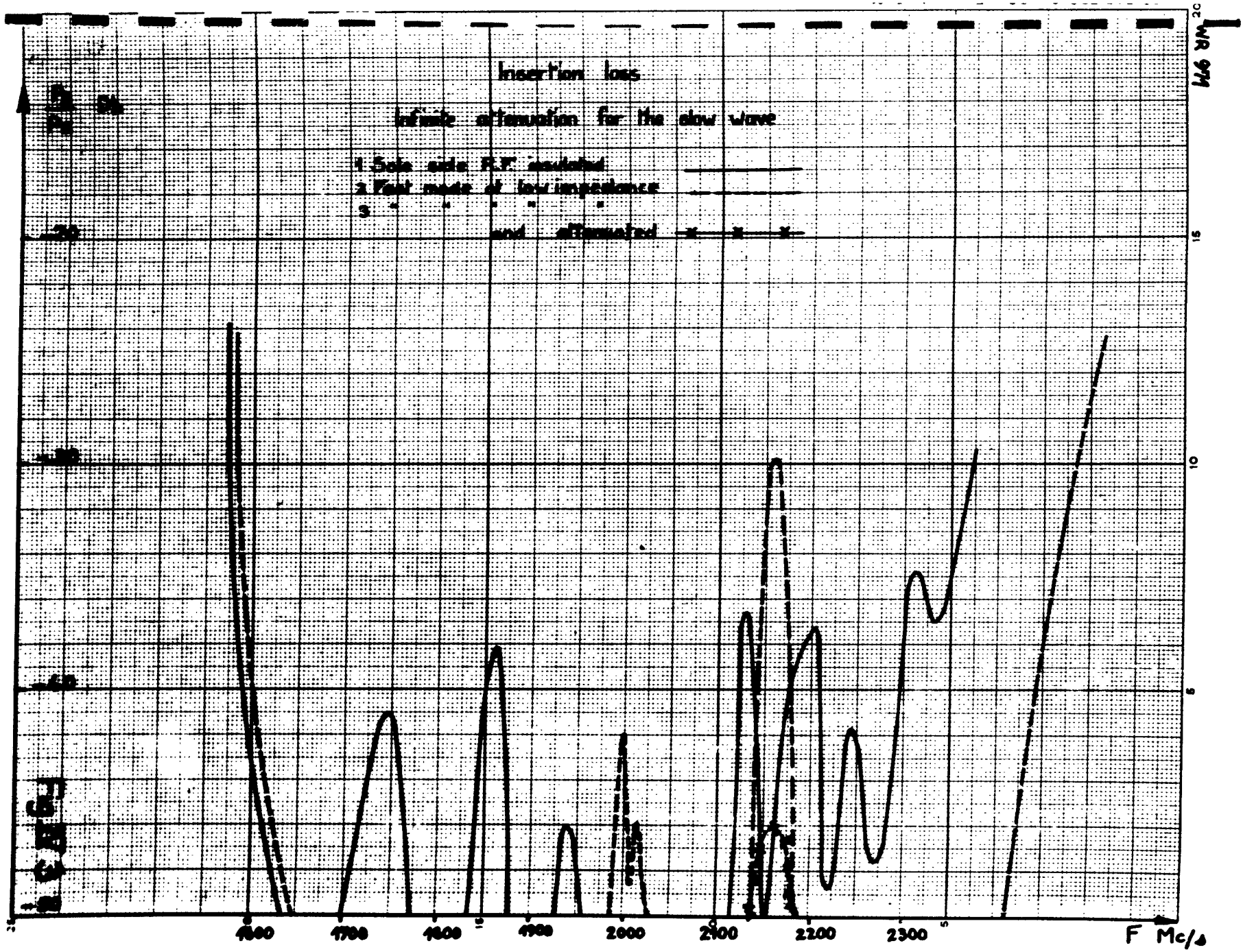
Insertion loss
Infinite attenuation for the slow wave
1 Sole side R.F. insulated
2 Fast mode of low impedance
3 " " " "
and attenuated
-20
-40
-60
-80
1600
1700
1800
1900
2000
2100
2200
2300
F Mc/s
WR 975